Catalogo parti di ricambio
Spare parts catalogue
Ersatzteilkatalog
Catalogue pieces detachees
Catalogo de repuestos

Model: COLIBRI 15 [TOMA]

Code: 1121010279

Valid from: 02/10/2017

INDEX

Table	Model	pag.
1	COLIBRI_00	4
2	GM110_00	6
3		
4		
5		
6		
7		
8		
9		
10		

Model: COLIBRI 15 [TOMA]
Code: 1121010279
Valid from: 02/10/2017
Tav.: **COLIBRI_00**

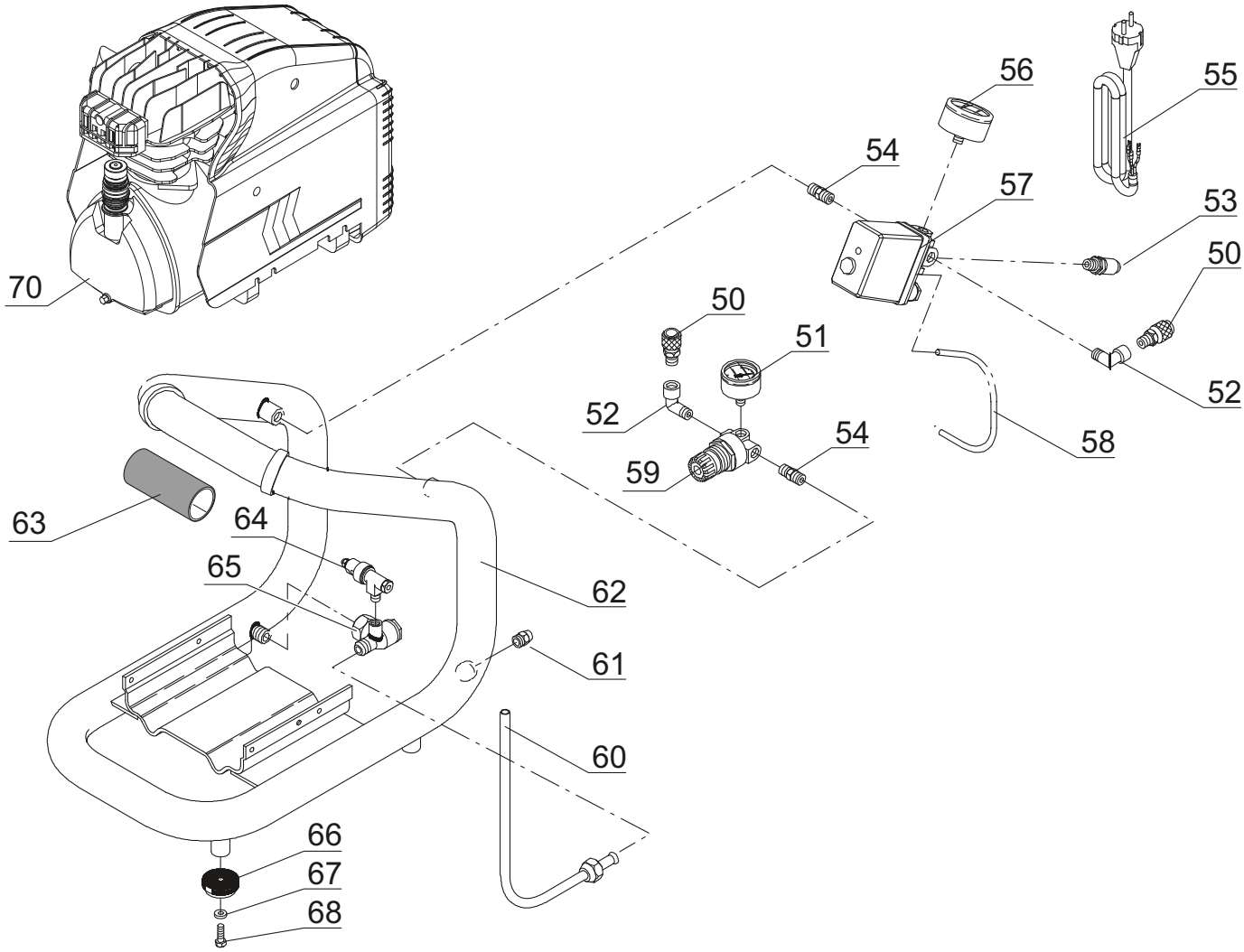

Model: COLIBRI 15 [TOMA]
Code: 1121010279
Valid from: 02/10/2017
Tav.: **COLIBRI_00**

N°	Code	Q.ty	Q.ty*	Description	N°	Code	Q.ty	Q.ty*	Description
50	1127130057	2		RUBINETTO TAP					
51	1127110024	1	20	MANOMETRO PRESSURE GAUGE					
52	1127080018	2		RACCORDO FITTING					
53	1127190206	1	20	VALVOLA DI SIC. RELIEF VALVE					
54	1127080012	2		RACCORDO FITTING					
55	1127320645	1		CAVO ALIMENTAZIONE POWER CABLE					
56	1127110030	1	20	MANOMETRO PRESSURE GAUGE					
57	1127250062	1	20	PRESSOSTATO PRESSURE SWITCH					
58	1127230001	1		TUBO RILSAN RILSAN TUBE					
59	1127100081	1		RIDUTTORE DI PRESSIONE PRESSURE REDUCER					
60	1127230952	1		TUBO ALIMENTAZIONE INFEED HOSE					
61	1127130039	1	20	RUBINETTO SPURGO DISCHARGE TAP					
62	1125150910	1		SERBATOIO TANK					
63	1127280500	1		MANOPOLA KNOB					
64	1127190606	1		VALVOLA SCARICO VALVE					
65	1127190004	1	20	VALVOLA RITEGNO CHECK VALVE					
66	1127360014	4		PIEDE IN GOMMA RUBBER FOOT					
67	1127030019	4		RONDELLA WASHER					
68	1127010408	4		VITE SCREW					
70	1123010118	1		GRUPPO POMPANTE PUMP UNIT					

Q.ty = Quantità unitaria / Single unit quantity / Quantité unitaire / Cantidad unitaria / Einzeleinheitsmenge
Q.ty* = Ricambi consigliati in percentuale / Suggested spare parts in percentage / Pièces de rechange suggérées en pourcentage / Piezas de repuesto sugeridas en porcentaje / Vorgeschlagene Ersatzteile in Prozent

Model: COLIBRI 15 [TOMA]
Code: 1121010279
Valid from: 02/10/2017
Tav.: **GM110_00**

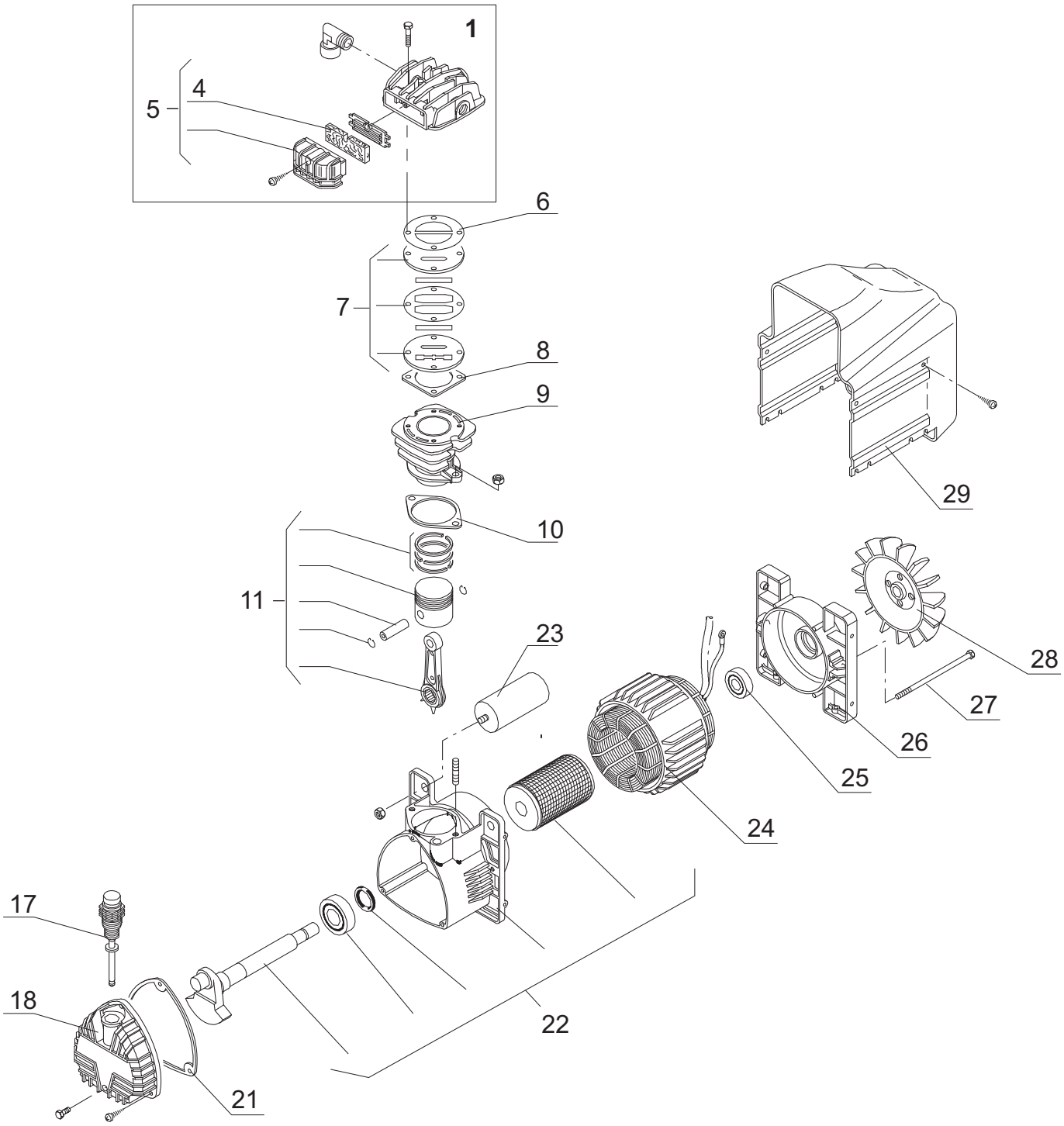

Model: COLIBRI 15 [TOMA]
Code: 1121010279
Valid from: 02/10/2017
Tav.: **GM110_00**

N°	Code	Q.ty	Q.ty*	Description	N°	Code	Q.ty	Q.ty*	Description
1	1124020001	1		KIT TESTA HEAD KIT					
4	1127210001	1	30	ELEMENTO FILTRANTE FILTER CARTRIDGE					
5	1120002067	1		FILTRO ASPIRAZIONE INTAKE FILTER					
6	1127070858	1		GUARNIZIONE GASKET					
7	1127450952	1	30	KIT PIASTRA VALVOLE VALVE PLATE KIT					
8	1127070859	1		GUARNIZIONE GASKET					
9	1127570513	1		CILINDRO CYLINDER					
10	1127070857	1		GUARNIZIONE GASKET					
11	1124190033	1	30	KIT BIELLA CON ROD KIT					
17	1127180106	1		ASTA LIVELLO OLIO OIL DIPSTICK					
18	1127650002	1		COPERCHIO CARTER CASING COVER					
21	1127070846	1		GUARNIZIONE GASKET					
22	1120003316	1		GRUPPO CARTER/ALBERO CRAKCASE/SHAFT KIT					
23	1127310010	1		CONDENSATORE CAPACITOR					
24	1124010008	1		CARCASSA CASING					
25	1127060001	1		CUSCINETTO BEARING					
26	1125110006	1		CALOTTA COVER					
27	1127010801	2		VITE SCREW					
28	1127200007	1	10	VENTOLA DI RAFF. FAN					
29	1127150081	1		CARENATURA HOUSING					

Q.ty = Quantità unitaria / Single unit quantity / Quantité unitaire / Cantidad unitaria / Einzeleinheitsmenge
Q.ty* = Ricambi consigliati in percentuale / Suggested spare parts in percentage / Pièces de rechange suggérées en pourcentage / Piezas de repuesto sugeridas en porcentaje / Vorgeschlagene Ersatzteile in Prozent